REMOTE CONTROLLER WITH FIVE FUNCTIONS

General Description

The TX2/RX2 are a pair of CMOS LSIs designed for remote controlled car applications. TX2 Is the transmitter and RX2 is the receiver. They provide five function key to control forward, Backward, Rightward, Leftward and Turbo motions. Beside,a combination of these five motions can be played.

RX2 Provide two high effective amplifiers and Enhance Signal Input recognition capacity to enhance remote control distance.

Major Core Features:

- Wide and low operating voltage range: 2.2V to 5.0V
- Typical oscillator frequency:
  RF:128KHz.
  IR :114KHz(Carrier Frequency:57KHz).
  IR : 76KHz(Carrier Frequency:38KHz).
- Provide two transmissive interface(RF and IR)for different application.
- RX2 Provide two high effective amplifiers to enhance remote control distance.
- Enhance Signal Input recognition capacity for very weak signal.
- Auto Power-OFF function for TX2
- Low Standby current (TX2) and low operating current.(RX2).
- Oscillator with an external resistor.

Peripheral Features:

- 5-function remote controller controlling forward/ backward/ turbo/ right/ left.
- Few external components needed.

Application Field:

- remote controlled toy.
- remote electric appliance controller.

Special Features Description:

- TX2 auto Power OFF function:

  When input key is pulled low, TX2 will wake up, SC and SO will continuously send out code in RF format (Non-Carrier) and IR format(Carrier). However when a complete code is sent out and the key is released,TX2 will automatically into powered off mode.
- TX2 IR transmission interface:

  Built-in counter to generate 38KHz or 57KHz carrier frequency for Infrared applications.

Pin Assignment and Block Diagram:

Transmitter Pin Assignment TX2C

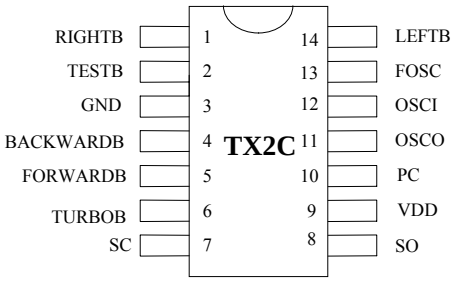

Block Diagram

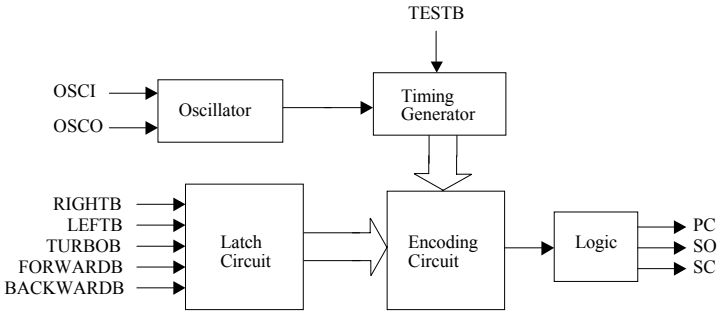

Receiver Pin Assignment RX2C

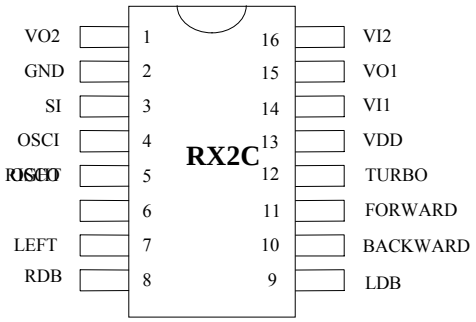

Block Diagram

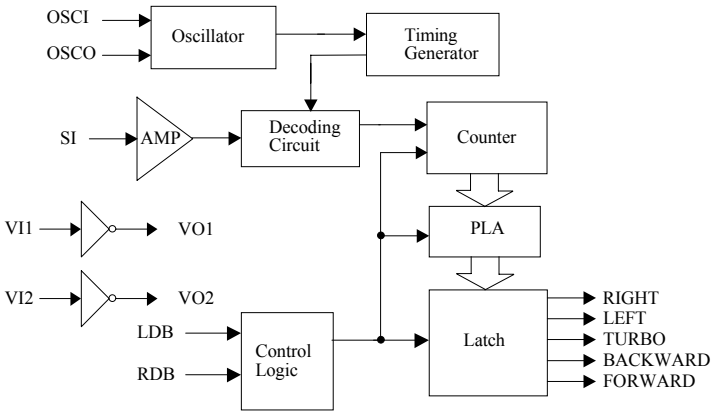

Absolute Maximum Ratings

DC Supply Voltage.....0.3V to 5.0V

Input/Output Voltage.....GND -0.2V to VDD + 0.2V

Operating temperature.....-10°C to 60°C

Storage Temperature.....-25°C to 125°C

Comments*

Never allow a stress to exceed the values listed under "Absolute Maximun Ratings", otherwise the device would suffer from a permanent damage. Nor is a stress at the listed value be allowed to persist over a period, since an extended exposure to the absolute maximum rating condition may also affect the reliability of the device, if not causing a damage thereof.

Electrical Characteristics

TX2

(VDD=4.5V, Fosc = 128KHz, T_A=25°C, unless otherwise specified.)

Parameter	Symbol	Min.	Typ.	Max.
Operating Voltage	VDD	2.2V	4.5V	5.0V
Operating Current	I_{dd}	-	-	1mA
Stand-by Current	I_{stb}	-	-	1μA
DC O/P Driving Current	I_{drive}	3mA	-	-
AC O/P Driving Current	I_{drive}	3mA	-	-
AC O/P Frequency	F_{audio}	500Hz	-	1KHz

RX2

(VDD=4.5V, Fosc = 128KHz, T_A=25°C, unless otherwise specified.)

Parameter	Symbol	Min.	Typ.	Max.
Operating Voltage	VDD	2.2V	4.5V	5.0V
Operating Current	I_{dd}	-	-	0.7mA
O/P Driving Current	I_{drive}	0.6mA	-	-
O/P Sinking Current	I_{sink}	0.6mA	-	-
Effect Decoding Frequency Variation	$F_{tolerance}$	-20%	-	20%

Pin Description

TX2

Pin No.	Designation	Description
1	RIGHTB	The rightward function will be selected when this pin is connected to GND.
2	TESTB	This pin is used for testing purpose only.
3	GND	Negative power supply
4	BACKWARDB	The backward function will be selected when this pin is connected to GND.
5	FORWARDB	The forward function will be selected when this pin is connected to GND.
6	TURBOB	The turbo function will be selected when this pin is connected to GND.
7	SC	Output pin of the encoding signal with carrier frequency
8	SO	Output pin of the encoding signal without carrier frequency
9	VDD	Positive power supply
10	PC	Power control output pin
11	OSCO	Oscillator output pin
12	OSCI	Oscillator input pin
13	FOSC	This pin is used for testing purpose.
14	LEFTB	The leftward function will be selected when this pin is connected to GND.

RX2

Pin No.	Designation	Description
1	VO2	Inverter 2 output pin for power amplify
2	GND	Negative power supply
3	SI	Input pin of the encoding signal
4	OSCI	Oscillator input pin
5	OSCO	Oscillator output pin
6	RIGHT	Rightward output pin
7	LEFT	Leftward output pin
8	RDB	Rightward function is disabled when this pin is connected to GND.
9	LDB	Leftward function is disabled when this pin is connected to GND.
10	BACKWARD	Backward output pin
11	FORWARD	Forward output pin
12	TURBO	Turbo output pin

13	VDD	Positive power supply
14	VI1	Inverter 1 input pin for power amplify
15	VO1	Inverter 1 output pin for power amplify
16	VI2	Inverter 2 input pin for power amplify

Bit Format

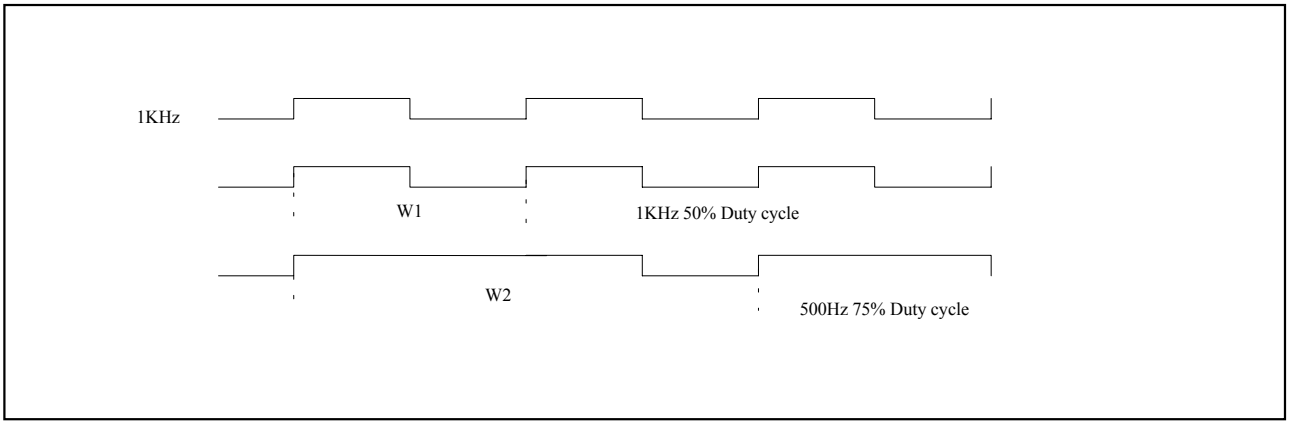

Data Format

W2 W2 W2 W2 (n) x W1 W2 W2 W2 W2 (n) x W1 W2 W2 W2 W2

Number of Function Codes (n) W1	Function Key	Decode Result
4		End Code
10	Forward	Forward
16	Forward & Turbo	Forward
22	Turbo	Turbo
28	Turbo & Forward & Left	Forward & Left
34	Turbo & Forward & Right	Forward & Right
40	Backward	Backward
46	Backward & Right	Backward & Right

52	Backward & Left	Backward & Left
58	Left	Left
64	Right	Right

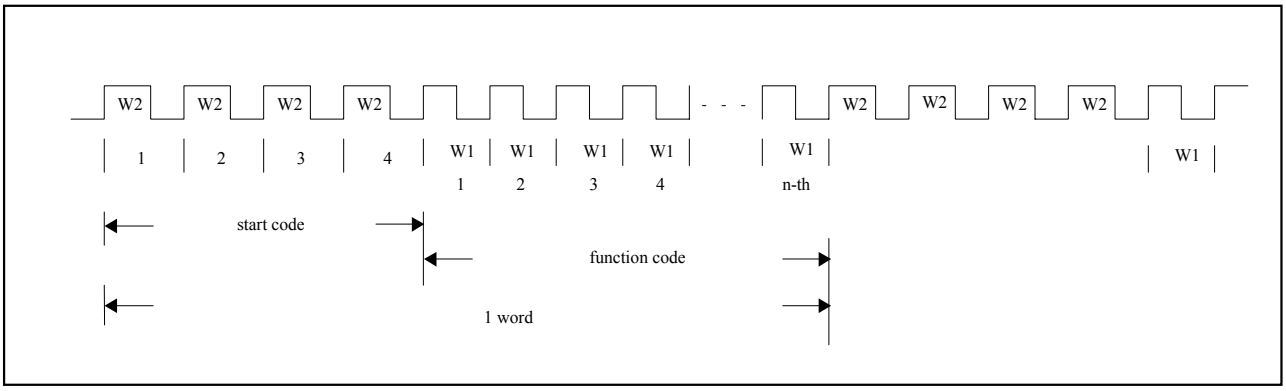

Encode/Decode Timing

(A)

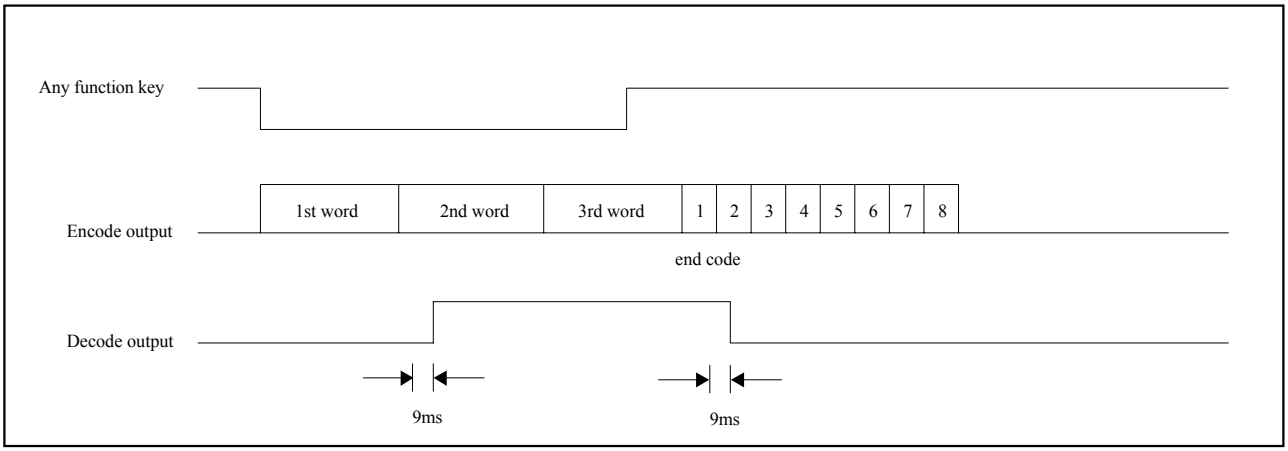

(B)

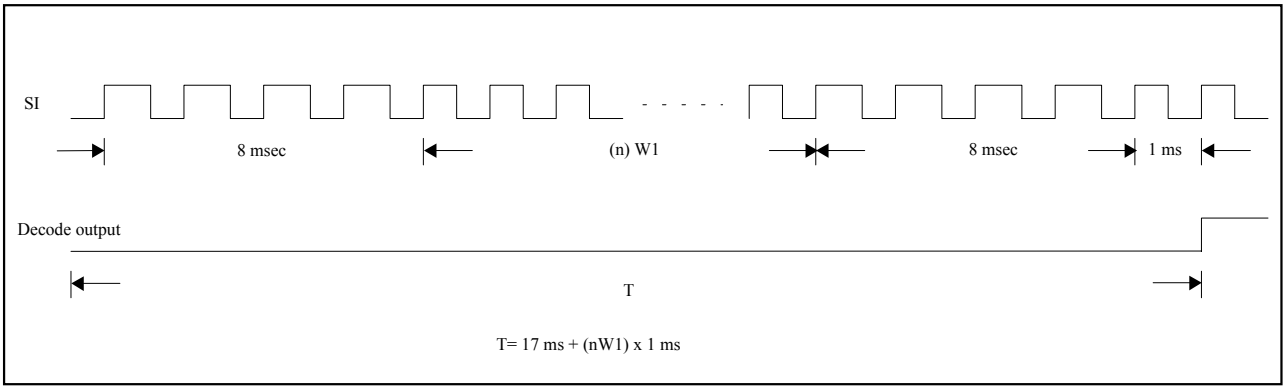

Typical Application Circuit

Transmitter (TX2 Fosc ≈128 KHz)

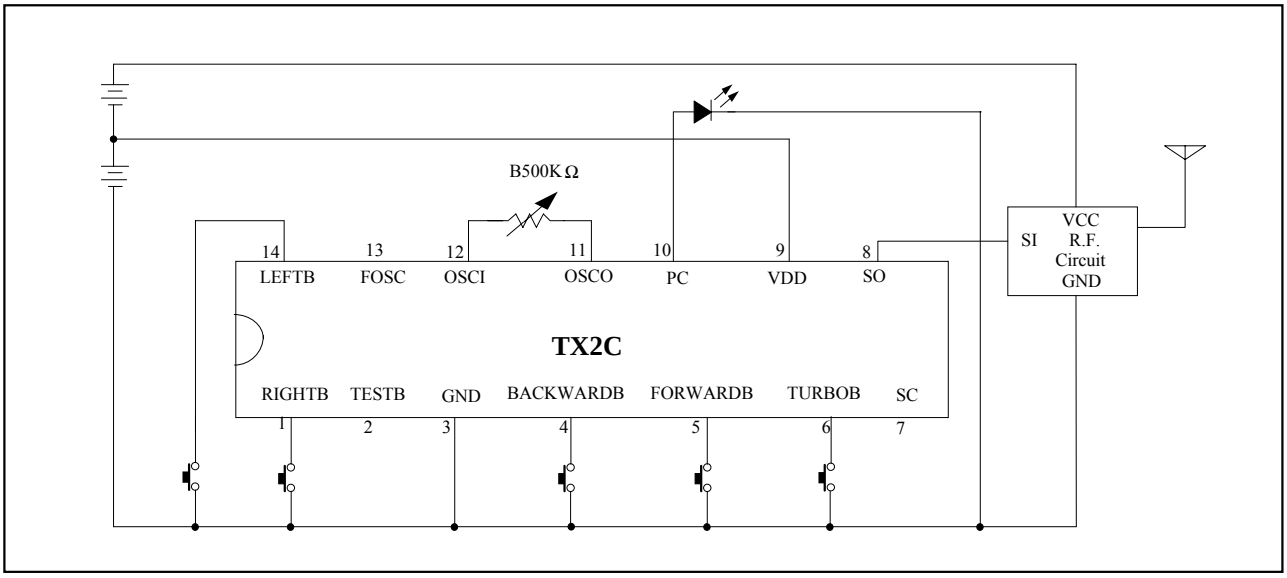

Receiver (RX2 Fosc ≈128 KHz)

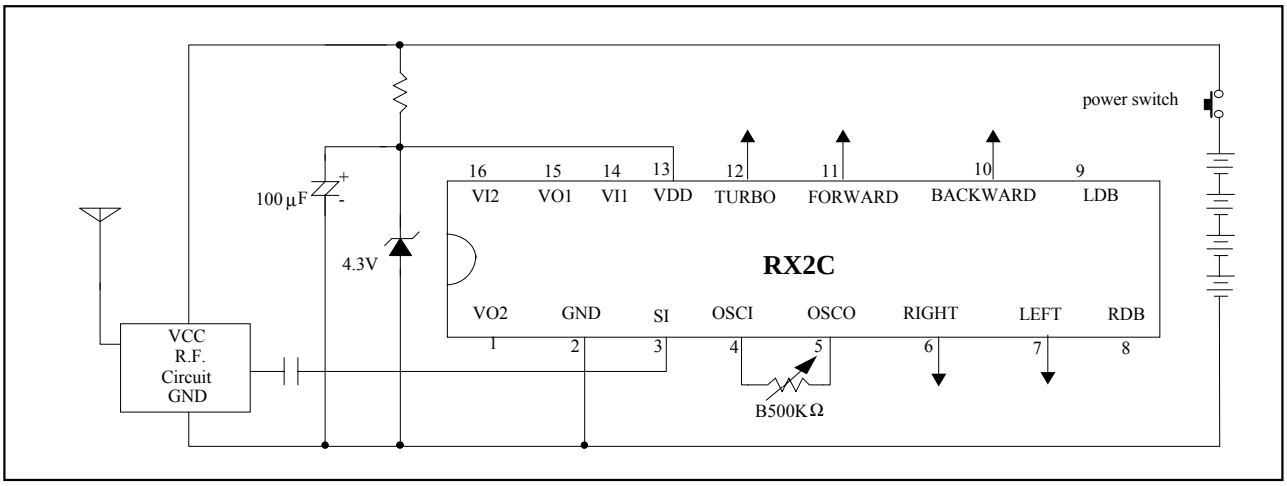

Infrared Application Circuit

Transmitter(TX2 Fosc ≈ 114 KHz)

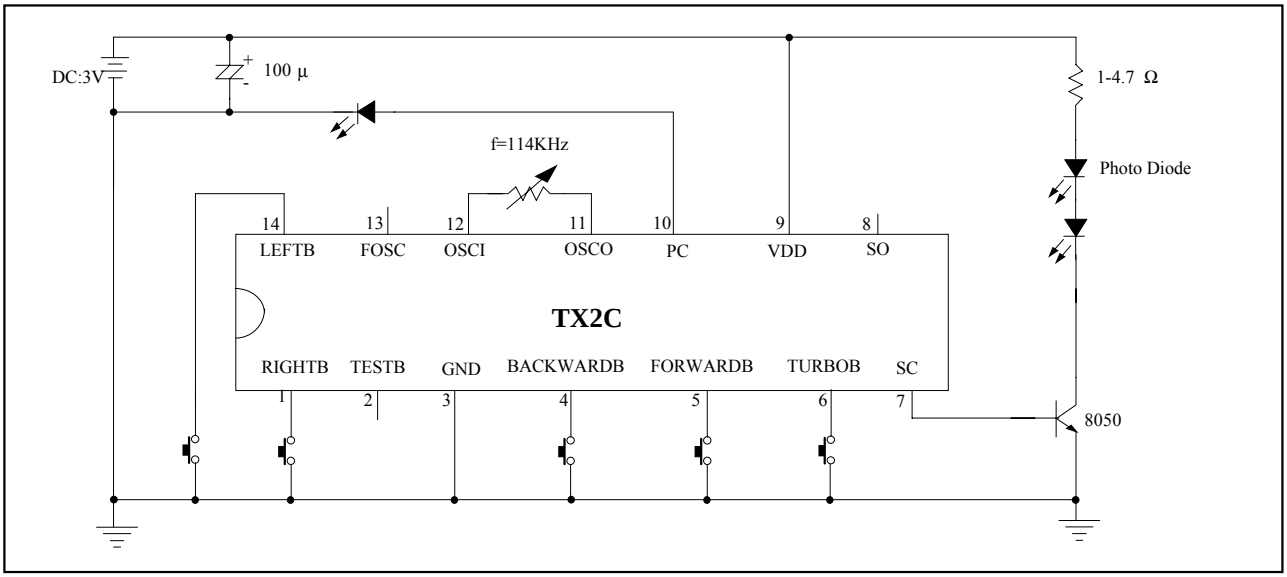

Recevier(RX2 Fosc ≈114KHz)

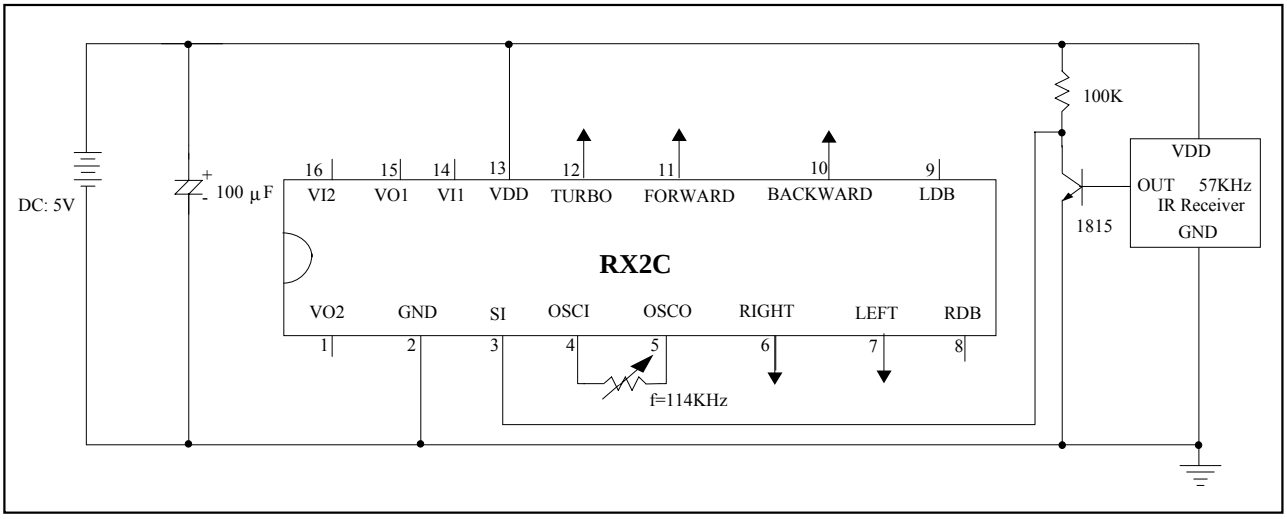

Testing Circuit

Fosc for TX2 ≅ Fosc, RX2 ≅ 128 KHz

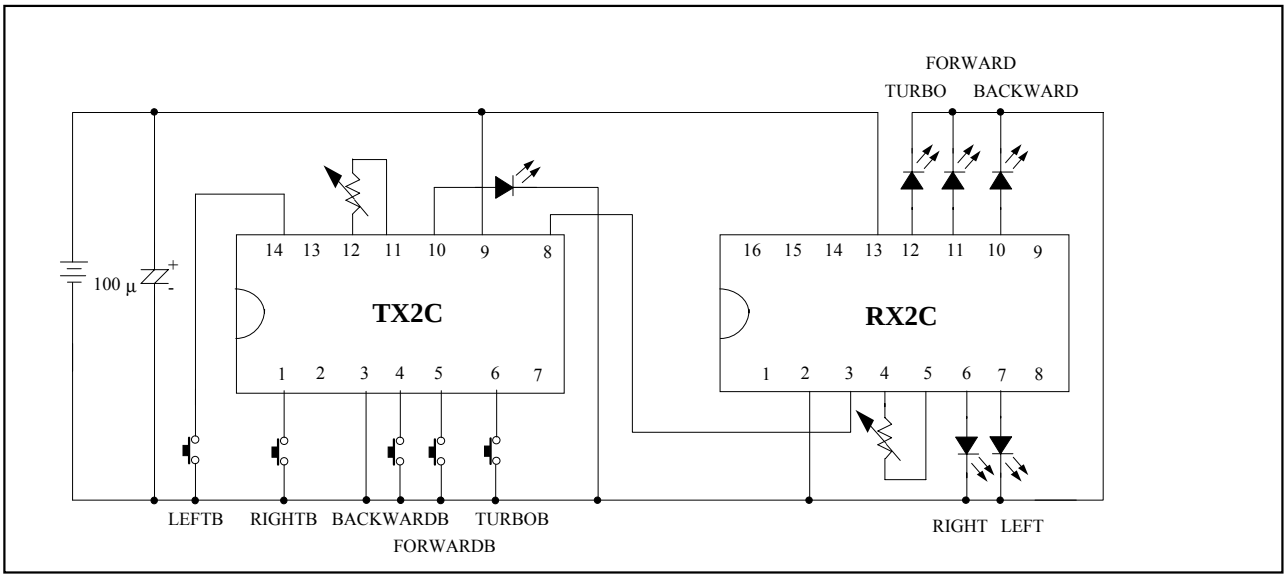

Bonding Diagram

TX2

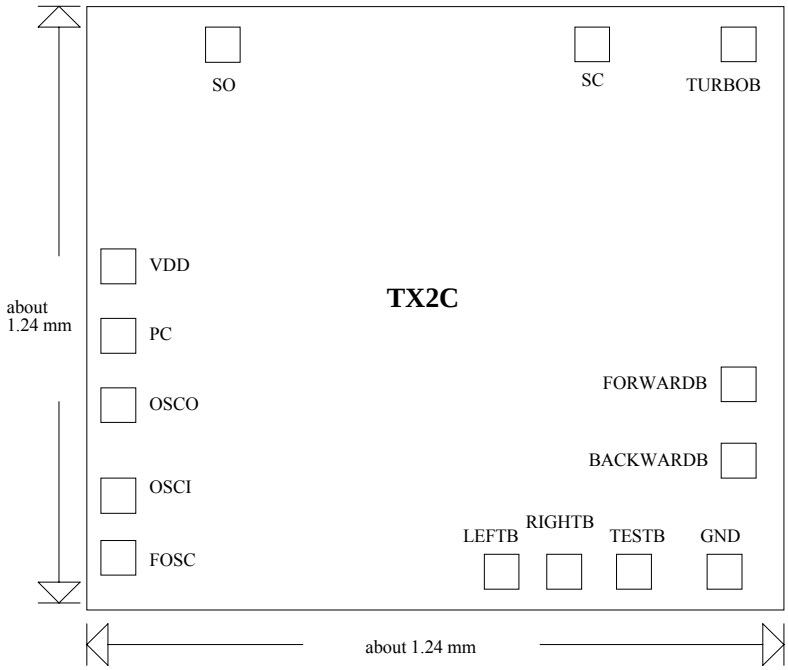

Designation	X	Y
RIGHTB	672.0	95.67
TESTB	815.63	95.60
GND	1002.25	95.63
BACKWARDB	1019.00	232.76
FORWARDB	1020.66	434.44
TURBOB	1018.56	1016.77
SC	693.17	1018.87
SO	255.33	1019.75
VDD	95.80	783.16
PC	95.72	650.66
OSCO	95.56	518.42
OSCI	93.75	287.04
FOSC	96.10	146.74
LEFTB	534.99	93.39

Unit:in um
X: 1240 Y: 1240

Note: Substrate is connected to VDD

RX2

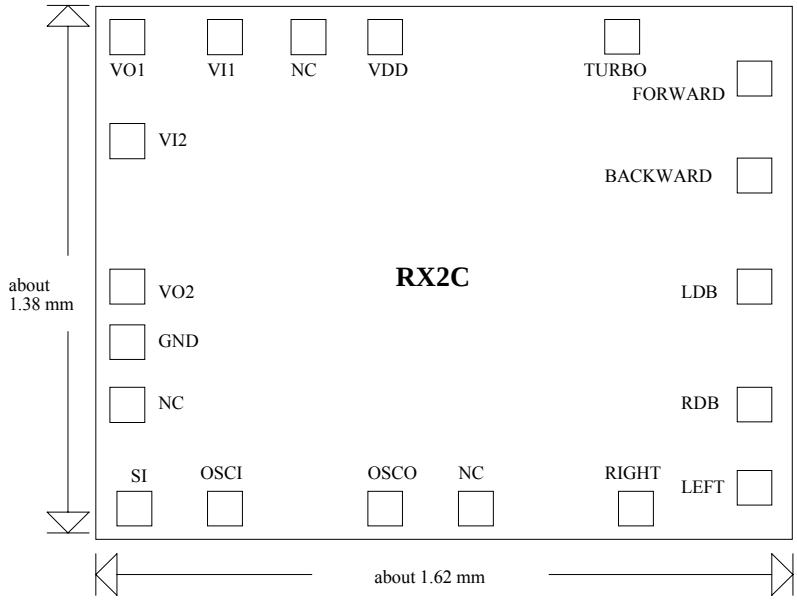

Designation	X	Y
VO2	91.82	677.22
GND	94.41	537.61
NC	91.93	405.44
SI	92.57	98.97
OSCI	269.48	101.80
OSCO	635.35	99.04
NC		
RIGHT	1029.73	99.12
LEFT	1397.16	139.50
RDB	1396.68	289.45
LDB	1397.10	539.08
BACKWARD	1396.72	801.79
FORWARD	1396.73	1035.18
TURBO	1135.79	1165.97
NC		
VDD	627.98	1165.40
VI1	235.61	1166.05
VO1	92.23	1166.02
VI2	92.02	933.79

Unit: in um
X: 1620 Y: 1380

Note: Substrate is connected to VDD